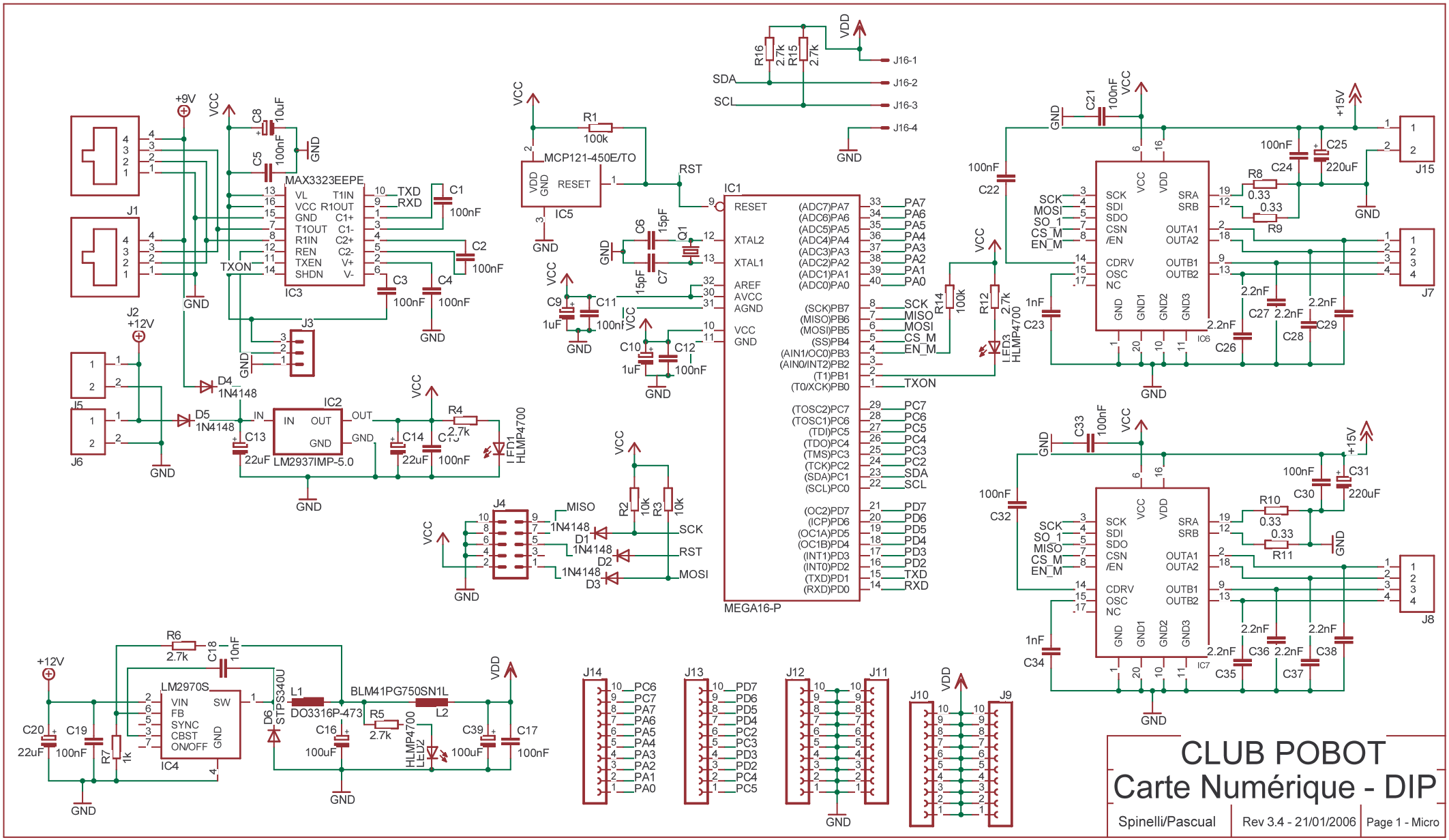

28/06/2006 22:45:10 f=0.86 C:\Documents and Settings\Gilles\My Documents\Documents\Robotik\Cartes Numeriques\CarteCNP\CarteCNP-V1\CarteNum-DIP-V1.4.sch (Sheet: 1/1)